SeaTalk-SeaTalk^{ng} converter

Handbook

Raymarine®

Trademarks and registered trademarks

Autohelm, hsb2, RayTech Navigator, Sail Pilot, SeaTalk, SeaTalkNG, SeaTalkHS and Sportpilot are registered trademarks of Raymarine UK Limited. RayTalk, Seahawk, Smartpilot, Pathfinder and Raymarine are registered trademarks of Raymarine Holdings Limited.

All other product names are trademarks or registered trademarks of their respective owners.

Fair Use Statement

You may print no more than three copies of this manual for your own use. You may not make any further copies or distribute or use the manual in any other way including without limitation exploiting the manual commercially or giving or selling copies to third parties.

Copyright ©2010 Raymarine UK Ltd. All rights reserved.

ENGLISH
Document number: 87121-3
Date: 06-2010

Chapter 1: Introduction

SeaTalk - SeaTalkng converter

The SeaTalk - SeaTalkng converter allows connection of a range of SeaTalk compatible products to the SeaTalkng network. It contains electronics to bridge communications between the 2, allowing information to be shared.

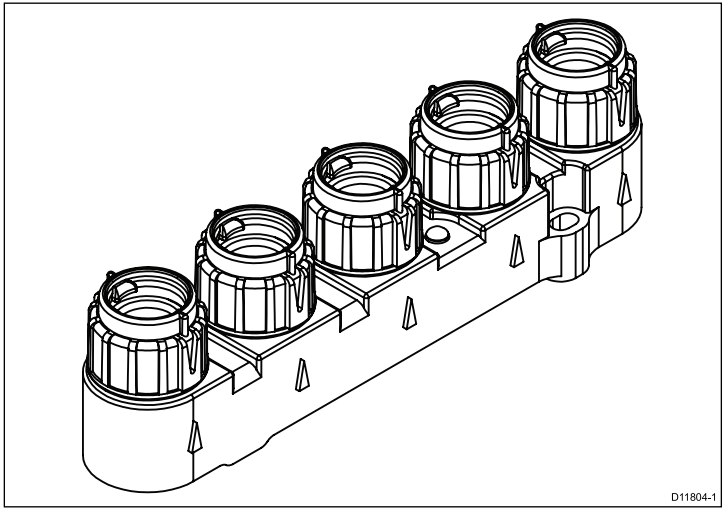

Data types supported

The converter supports the following types of data:

- Instrument and environment (Depth, Speed, Wind etc.)
- MOB (Man Overboard)
- GPS
- Heading
- Navigation Data (Waypoint information)
- Rudder angle

Handbook information

This handbook describes how to include the SeaTalk to SeaTalkng converter within the system of Raymarine electronics on your boat.

It includes information to help you:

- understand which Raymarine equipment is compatible with the converter,
- install and connect the converter within your system.

Additional handbooks

You may also need the additional information included in the SeaTalkng reference manual. In particular for assistance with:

- constructing the SeaTalkng network and backbone,
- connecting power, and
- LEN loading calculations.

Description	Part number
SeaTalkng reference manual	81300

All documents are available to download as PDFs from www.raymarine.com.

Important information

Warning: Potential ignition source

This product is NOT approved for use in hazardous/flammable atmospheres. Do NOT install in a hazardous/flammable atmosphere (such as in an engine room or near fuel tanks).

Caution: Power supply protection

When installing this product ensure the power source is adequately protected by means of a suitably-rated fuse or automatic circuit breaker.

Warning: Product installation and operation

This product must be installed and operated in accordance with the instructions provided. Failure to do so could result in personal injury, damage to your boat and/or poor product performance.

Caution: Service and maintenance

This product contains no user serviceable components. Please refer all maintenance and repair to authorized Raymarine dealers. Unauthorized repair may affect your warranty.

Warning: Switch off power supply

Ensure the boat's power supply is switched OFF before starting to install this product. Do NOT connect or disconnect equipment with the power switched on, unless instructed in this document.

Declaration of conformity

Raymarine Ltd. declares that the SeaTalk to SeaTalk^{ng} converter is in compliance with the essential requirements of EMC directive 2004/108/EC.

The original Declaration of Conformity certificate may be viewed on the relevant product page at www.raymarine.com

EMC installation guidelines

Raymarine equipment and accessories conform to the appropriate Electromagnetic Compatibility (EMC) regulations, to minimize electromagnetic interference between equipment and minimize the effect such interference could have on the performance of your system

Correct installation is required to ensure that EMC performance is not compromised.

For **optimum** EMC performance we recommend that wherever possible:

- Raymarine equipment and cables connected to it are:
  - At least 1 m (3 ft) from any equipment transmitting or cables carrying radio signals e.g. VHF radios, cables and antennas. In the case of SSB radios, the distance should be increased to 7 ft (2 m).
  - More than 2 m (7 ft) from the path of a radar beam. A radar beam can normally be assumed to spread 20 degrees above and below the radiating element.
- The product is supplied from a separate battery from that used for engine start. This is important to prevent erratic behavior and data loss which can occur if the engine start does not have a separate battery.
- Raymarine specified cables are used.
- Cables are not cut or extended, unless doing so is detailed in the installation manual.

Note: Where constraints on the installation prevent any of the above recommendations, always ensure the maximum possible separation between different items of electrical equipment, to provide the best conditions for EMC performance throughout the installation

Product disposal

Dispose of this product in accordance with the WEEE Directive.

The Waste Electrical and Electronic Equipment (WEEE) Directive requires the recycling of waste electrical and electronic equipment. Whilst the WEEE Directive does not apply to some Raymarine products, we support its policy and ask you to be aware of how to dispose of this product.

Technical accuracy

To the best of our knowledge, the information in this document was correct at the time it was produced. However, Raymarine cannot accept liability for any inaccuracies or omissions it may contain. In addition, our policy of continuous product improvement may change specifications without notice. As a result, Raymarine cannot accept liability for any differences between the product and this document.

Warranty registration

To register your Raymarine product ownership, please take a few minutes to fill out the warranty registration card found in the box, or visit www.raymarine.com and register on-line.

It is important that you register your product to receive full warranty benefits. Your unit package includes a bar code label indicating the serial number of the unit. You should stick this label to the warranty registration card.

Water ingress

Water ingress disclaimer

Although the waterproof rating capacity of Raymarine products exceeds that called for by the IPX6 standard, water intrusion and subsequent equipment failure may occur if any Raymarine equipment is subjected to commercial high pressure washing. Raymarine will not warrant equipment subjected to high pressure washing.

Chapter 2: Parts and accessories

Chapter contents

- 2.1 Parts supplied on page 10
- 2.2 SeaTalk - SeaTalk^{ng} converter cables on page 11

2.1 Parts supplied

The following items are included with the SeaTalk - SeaTalk^{ng} converter kit.

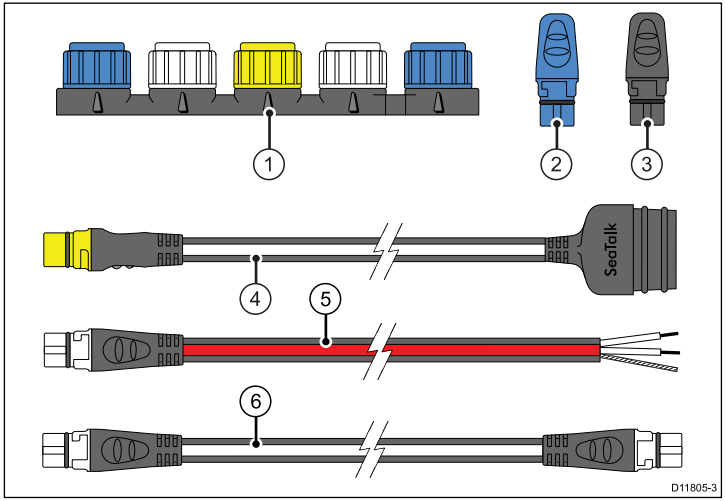

1	SeaTalk - SeaTalk^{ng} converter
2	SeaTalk^{ng} terminator (x2)
3	SeaTalk ^{ng} blanking plugs (x2)
4	400 mm (15 in) SeaTalk - SeaTalk^{ng} converter cable. This cable connects the converter to the first SeaTalk device on the spur.
5	SeaTalk^{ng} power cable
6	1 m (3.3 ft) SeaTalk^{ng} spur cable

Note: Fit the blanking plugs supplied into any unused SeaTalk^{ng} connection.

2.2 SeaTalk - SeaTalk^{ng} converter cables

These cables are available as accessories. They are also included with some compatible products.

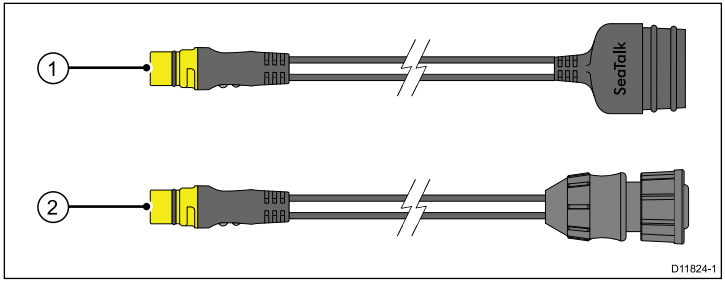

	Description	Part No.
1	1 m (3.3 ft) SeaTalk - SeaTalk^{ng} converter cable. This cable connects the converter to the first SeaTalk device on the spur.	A22164
2	10 m (32.8 ft) RS125 - Converter cable. This is required when connecting the converter to an RS125 GPS.	R32120

Chapter 3: Installation

Chapter contents

- 3.1 Typical systems on page 14
- 3.2 SeaTalk - SeaTalk^{ng} converter connections on page 18
- 3.3 Making SeaTalk^{ng} connections on page 22
- 3.4 System checks on page 23

3.1 Typical systems

Example: SeaTalk^{ng} system with SeaTalk instruments

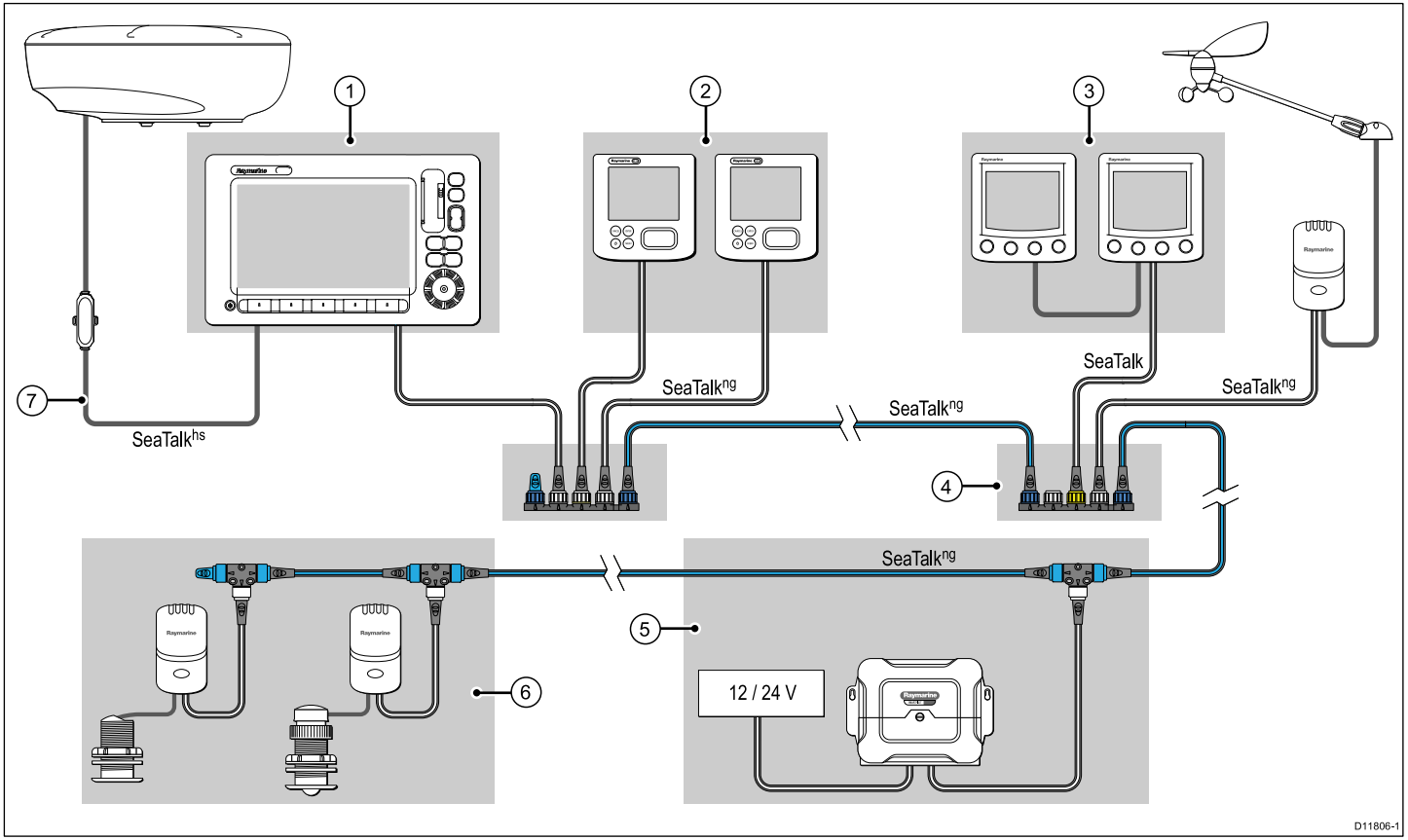

1	Multifunction display with integrated GPS (e.g. C-Series Widescreen)
2	SeaTalk^{ng} autopilot controller and master instrument (e.g. ST70)
3	SeaTalk repeat instruments (e.g ST60+)
4	SeaTalk - SeaTalk^{ng} converter
5	SeaTalk^{ng} autopilot course computer
6	Transducers connected via SeaTalk^{ng}
7	SeaTalk^{hs} connection (e.g. for digital radar)

Example: SeaTalk system with SeaTalk^{ng} multifunction display

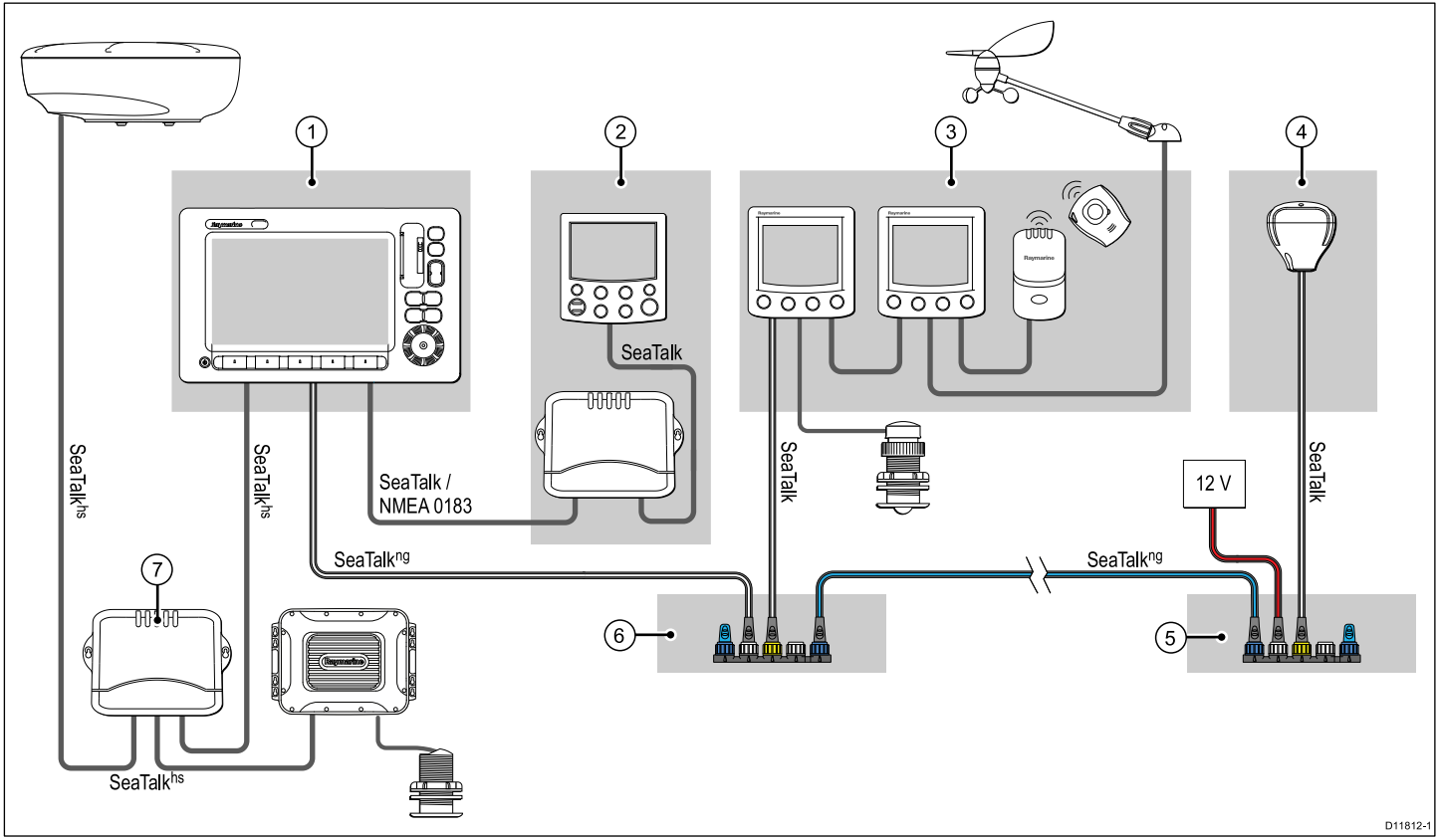

1	Multifunction display
2	SeaTalk autopilot system (This cannot be connected to the converter.)

3	SeaTalk spur containing instruments and MOB system
4	SeaTalk spur containing RS125 GPS
5 & 6	SeaTalk - SeaTalk^{ng} converter
7	SeaTalk^{hs} network (e.g. for digital sounder and radar)

Autopilot restrictions

Important: A SeaTalk autopilot or associated controller must not be connected to the SeaTalk - SeaTalk^{ng} converter.

There are restrictions as to how an autopilot is connected in a system containing a SeaTalk - SeaTalk^{ng} converter.

- **SeaTalk^{ng} autopilot** (e.g. SPX course computer with ST70 controller) — This can be connected as part of the SeaTalk^{ng} system in the usual manner. However any SeaTalk cable from the autopilot must NOT be connected to the converter.
- **SeaTalk autopilot** (e.g. S1, S2 or S3 course computer with ST6002 controller) — This cannot be connected to the converter, nor to any device on the converter's SeaTalk spur. A SeaTalk autopilot will usually be connected directly to the multifunction display.

Seatalk^{ng}

SeaTalk^{ng} (Next Generation) is an enhanced protocol for connection of compatible marine instruments and equipment. It replaces the older SeaTalk and SeaTalk^{2} protocols.

SeaTalk^{ng} utilizes a single backbone to which compatible instruments connect using a spur. Data and power are carried within the backbone. Devices that have a low draw can be powered from the network, although high current equipment will need to have a separate power connection.

SeaTalk^{ng} is a proprietary extension to NMEA 2000 and the proven CAN bus technology. Compatible NMEA 2000 and SeaTalk / SeaTalk^{2} devices can also be connected using the appropriate interfaces or adaptor cables as required.

3.2 SeaTalk - SeaTalkng converter connections

The converter connects in line as part of the SeaTalkng backbone. It provides connections for SeaTalkng and SeaTalk devices.

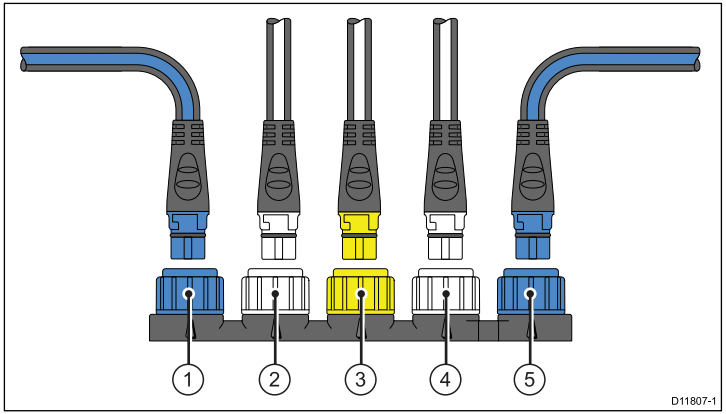

1	Blue — SeaTalkng backbone connection
2	White — SeaTalkng spur connection
3	Yellow — SeaTalk spur connection
4	White — SeaTalkng spur connection
5	Blue — SeaTalkng backbone connection

SeaTalk spur connection

The converter will support connection of a single isolated SeaTalk spur. The converter bridges data between this SeaTalk spur and the SeaTalkng bus.

Please note the following regarding the SeaTalk spur:

- The spur is for connection of up to 5 SeaTalk devices.
- It cannot be linked to other parts of the SeaTalk system (it is an isolated spur).
- It must not be connected to any power supply.

SeaTalkng spur connections

These allow connection of a standard SeaTalkng spur, and form part of the SeaTalkng bus.

Avoid data and ground loops

Important:

The converter must only be connected to either the SeaTalk or SeaTalkng connections of any device, NOT both.

Converter power supply

The converter takes its power from the SeaTalkng bus and provides power to devices on the SeaTalk spur.

Power must not be connected into the SeaTalk spur. To be certain, disconnect any existing separate power connection at the SeaTalk devices on the spur.

SeaTalk instrument connection to the SeaTalk^{ng} converter

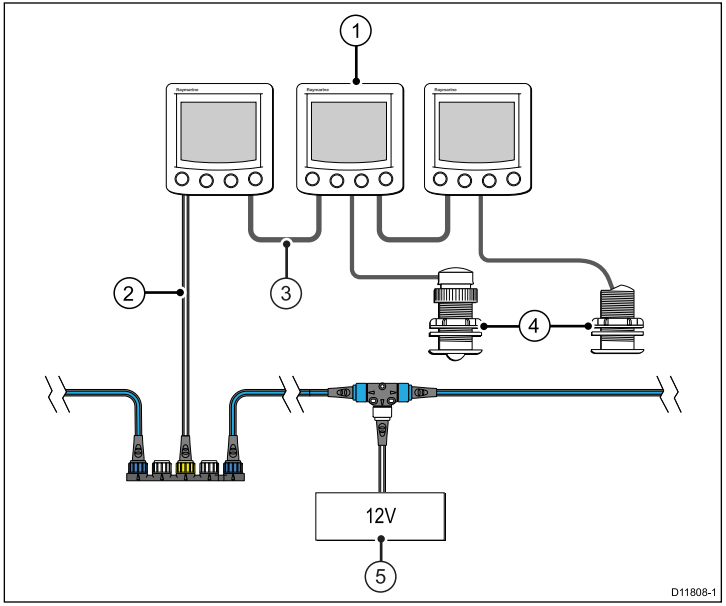

1	ST60+ or ST40 instruments connected on a SeaTalk spur. The spur may contain a maximum of 5 SeaTalk instruments.
2	SeaTalk - SeaTalk^{ng} converter cable.
3	SeaTalk cable.
4	Transducers connected directly to instrument.
5	Appropriate rated, fused and switched power supply into SeaTalk^{ng} backbone. (This may be a dedicated spur, or from an appropriate power source such as an autopilot course computer.)

Note: The instruments are powered from the connection to the converter. Any existing separate power connection to the instruments must be completely disconnected.

LifeTag connection to the SeaTalk - SeaTalk^{ng} converter

The LifeTag Base Station can be connected as part of the isolated spur into the converter.

Note: The LifeTag Base Station is powered from its connection to the converter. Any existing separate power connection to the Base Station must be completely disconnected.

Direct connection

You can connect the LifeTag Man Overboard (MOB) system directly to the converter using the SeaTalk - SeaTalk^{ng} converter cable.

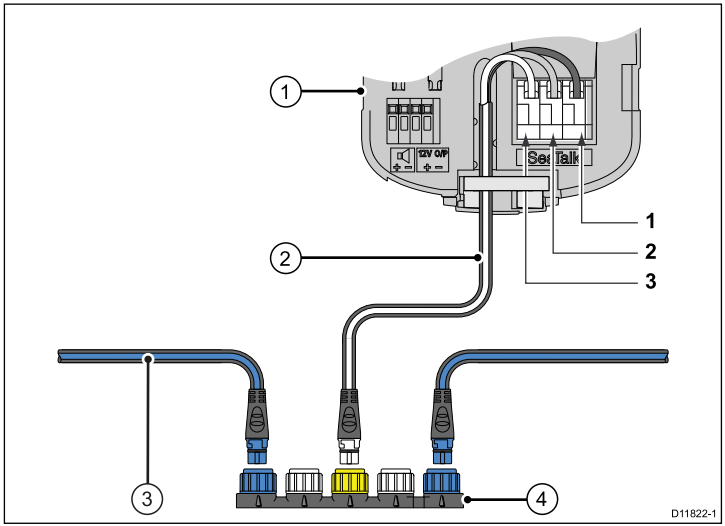

1	LifeTag Base Station
2	SeaTalk - SeaTalk ng converter cable
3	SeaTalkng backbone
4	SeaTalk - SeaTalkng converter

Connection colors

1	Red (12 V)
2	Screen
3	Yellow (SeaTalk data)

Connection via a SeaTalk block

The LifeTag Base Station and converter can be connected using a SeaTalk block. This may be useful in an existing installation where the Base Station already has the SeaTalk cable attached.

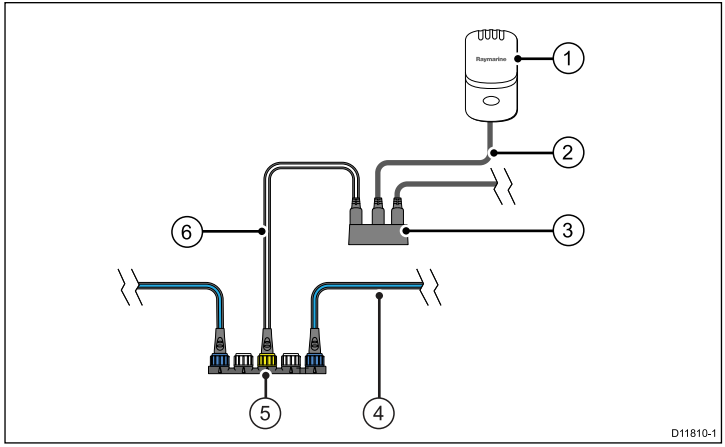

1	LifeTag Base Station
2	SeaTalk cable (bare ends into Base Station)
3	SeaTalk block
4	SeaTalkng backbone
5	SeaTalk to SeaTalkng converter
6	SeaTalk - SeaTalk ng converter cable

Connection into a compatible device

The MOB can be connected into a compatible device on the SeaTalk spur.

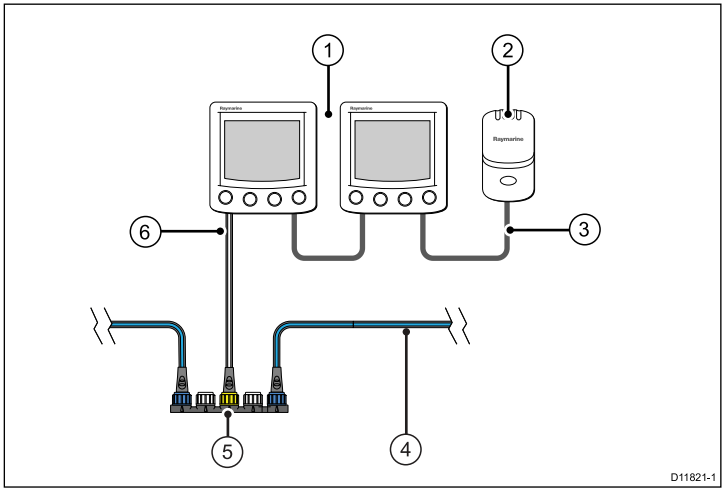

1	Compatible SeaTalk device (e.g. an ST60+ instrument)
2	LifeTag Base Station
3	SeaTalk cable
4	SeaTalkng backbone
5	SeaTalk to SeaTalkng converter
6	SeaTalk - SeaTalkng converter cable

RS125 GPS connection to SeaTalk - SeaTalkng converter

Important: The GPS connects directly to the SeaTalk connection on the converter. It cannot share this connection with other devices.

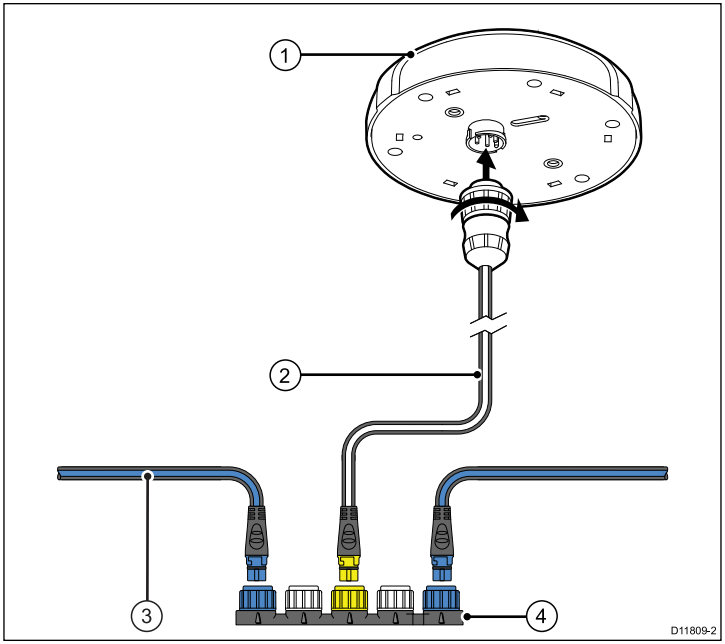

1	RS125 GPS
2	RS125 to converter cable — The GPS must be the only device on this spur.
3	SeaTalkng backbone
4	SeaTalk - SeaTalkng converter

3.3 Making SeaTalkng connections

1. Rotate collar to UNLOCKED position (so molded arrows are aligned).
2. Ensure cable end connector is correctly oriented, then fully insert.

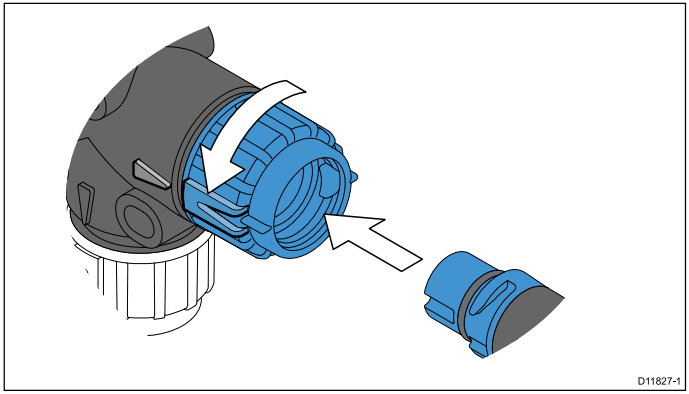

3. Rotate collar (2 clicks) until it snaps into the LOCKED position (almost one quarter turn).

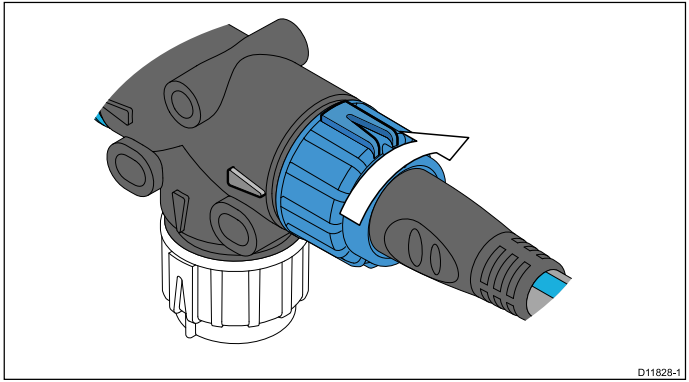

Cable types and length

It is important to use cables of the appropriate type and length

- Unless otherwise stated use only standard cables of the correct type, supplied by Raymarine.
- Ensure that any non-Raymarine cables are of the correct quality and gauge. For example, longer power cable runs may require larger wire gauges to minimize voltage drop along the run.

Routing cables

Cables must be routed correctly, to maximize performance and prolong cable life.

- Do NOT bend cables excessively. Wherever possible, ensure a minimum bend radius of 100 mm.

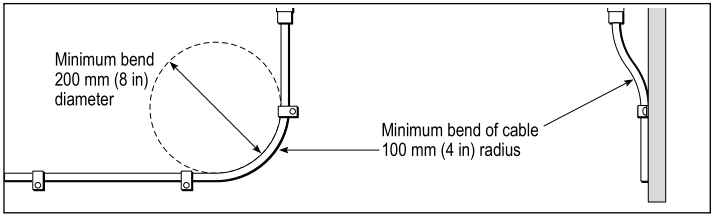

- Protect all cables from physical damage and exposure to heat. Use trunking or conduit where possible. Do NOT run cables through bilges or doorways, or close to moving or hot objects.
- Secure cables in place using tie-wraps or lacing twine. Coil any extra cable and tie it out of the way.
- Where a cable passes through an exposed bulkhead or deckhead, use a suitable watertight feed-through.
- Do NOT run cables near to engines or fluorescent lights.

Always route data cables as far away as possible from:

- other equipment and cables,
- high current carrying ac and dc power lines,
- antennae.

Strain relief

Ensure adequate strain relief is provided. Protect connectors from strain and ensure they will not pull out under extreme sea conditions.

Cable shielding

Ensure that all data cables are properly shielded that the cable shielding is intact (e.g. hasn't been scraped off by being squeezed through a tight area).

3.4 System checks

After connection of the SeaTalk - SeaTalk^{ng} converter it is advisable to perform checks on the data shared around the system.

Typical checks should include:

- **Check your GPS position**. At a known location check that the GPS position is accurately shown on all displays and appropriate instruments.
- **Calibrate wind, speed, depth etc.** Ensure that instrument data is accurate and is available at all appropriate displays and instruments.
- **LifeTag MOB functional test**. Check that the LifeTag system generates the appropriate warnings / alarms at all appropriate displays and instruments.
- **Autopilot test**. Check that the autopilot operates as expected and that heading information is available at all appropriate displays and instruments.

All checks should be performed in a safe and familiar environment and in accordance with the instructions supplied with each product.

Chapter 4: Troubleshooting and support

Chapter contents

- 4.1 System data troubleshooting on page 26
- 4.2 SeaTalk - SeaTalk^{ng} converter LED indications on page 27
- 4.3 Raymarine technical support on page 27

4.1 System data troubleshooting

Aspects of the installation can cause problems with the data shared between connected equipment. Such problems, their possible causes and solutions are described here.

Problem	Possible causes	Possible solutions
Instrument, engine or other system data is unavailable at all displays.	Data is not being received at the display.	Check the data bus (e.g. SeaTalk^{ng}) wiring and connections.
		Check the overall integrity of the data bus (e.g. SeaTalk^{ng}) wiring.
		If available refer to the reference guide for the data bus. (e.g. SeaTalk^{ng} reference manual)
	Data source (e.g ST70 instrument or engine interface) is not operating.	Check the source of the missing data (e.g. ST70 instrument or engine interface).
		Check the power to the SeaTalk bus.
		Refer to the manufacturer's handbook for the equipment in question.
	Software mismatch between equipment may prevent communication.	Contact Raymarine technical support.
Instrument or other system data is missing from some but not all displays.	SeaTalk^{hs} network problem	Check that all required equipment is connected to the SeaTalk^{hs} switch.
		Check the status of the SeaTalk^{hs} Switch.
		Check that SeaTalk^{hs} cables are free from damage.
	Software mismatch between equipment may prevent communication.	Contact Raymarine technical support

4.2 SeaTalk - SeaTalk^{ng} converter LED indications

The LED indicates SeaTalk^{ng} and SeaTalk connection status.

LED state (8 Second cycle)	SeaTalk^{ng} connection status	SeaTalk connection status
	Healthy	Healthy
	Not connected / fault	Not connected / fault
	Not connected / fault	Healthy
	Healthy	Not connected / fault
	Connected but not receiving data	Not connected / fault
	High voltage (power supply too high)	
	Low voltage / Converter not operational	

4.3 Raymarine technical support

Raymarine provides a comprehensive customer support service, on the world wide web, through our worldwide dealer network and by telephone help line. If you are unable to resolve a problem, please use any of these facilities to obtain additional help.

Web support

Please visit the customer support area of our website at:

www.raymarine.com

This contains Frequently Asked Questions, servicing information, e-mail access to the Raymarine Technical Support Department and details of worldwide Raymarine agents.

Telephone support

In the USA call:
+1 603 881 5200 extension 2444

In the UK, Europe, the Middle East, or Far East call:
+44 (0)23 9271 4713

Product information

If you need to request service, please have the following information to hand:

- Product name.
- Product identity.
- Serial number.
- Software application version.

You can obtain this product information using the menus within your product.

Appendix A Compatible SeaTalk devices

The following SeaTalk instruments and equipment can be connected to the converter

Description
ST40 Bidata
ST40 Depth
ST40 Speed
ST40 Wind
ST40 Compass
ST60+ Tridata
ST60+ Depth
ST60+ Speed
ST60+ Wind
ST60+ Compass / Heading
ST60+ Rudder angle
ST60+ Repeaters
RS125 and RS125 PLUS GPS sensors
LifeTag Wireless MOB system

Appendix B Technical specification

Nominal supply voltage	12 V dc
Operating voltage range	9 to 16 V dc
Current	• 50 mA converter peak operating current • 950 mA total peak supply to SeaTalk / SeaTalkng devices on spur connections.
LEN (Refer to Seatalkng reference manual for further information.	LEN 1, plus 3 for each SeaTalk instrument taking power from the converter.
Environmental	**Installation environment** • Operating temperature: -10 ºC to +50 ºC (14 ºF to 122 ºF) • Storage temperature: -20 ºC to +65 ºC (-4 ºF to 149 ºF) • Relative humidity: max 95% • Water proof to IPX6
Data connections.	• SeaTalkng backbone • 2 x SeaTalk ng spur • 1 x SeaTalk spur
Conformance	• Europe: 2004/108/EC • Australia and New Zealand: C-Tick, Compliance Level 2

Dimensions

W 110 mm (4.3 in) x Max. D 22 mm (0.9 in) x H 22 mm (0.9 in)

Raymarine®

www.raymarine.com

CE